600LBS EM LOCK

LA.EMLOCK

The LA.EMLOCK is capable of holding doors weighing up to 600 lbs
Operates at low voltage at low current consumption rate.

- **Low current consumption**
- **Reliable holding force**
- **Simple and convenient**

600LBS EM LOCK

LA.EMLOCK

Technical Specification

Holding Force	600lbs
Operating Voltage	12V DC
Current Consumption	480mA
Lock Type	Fail-safe type
Dimension	250mm x 48mm x 25mm

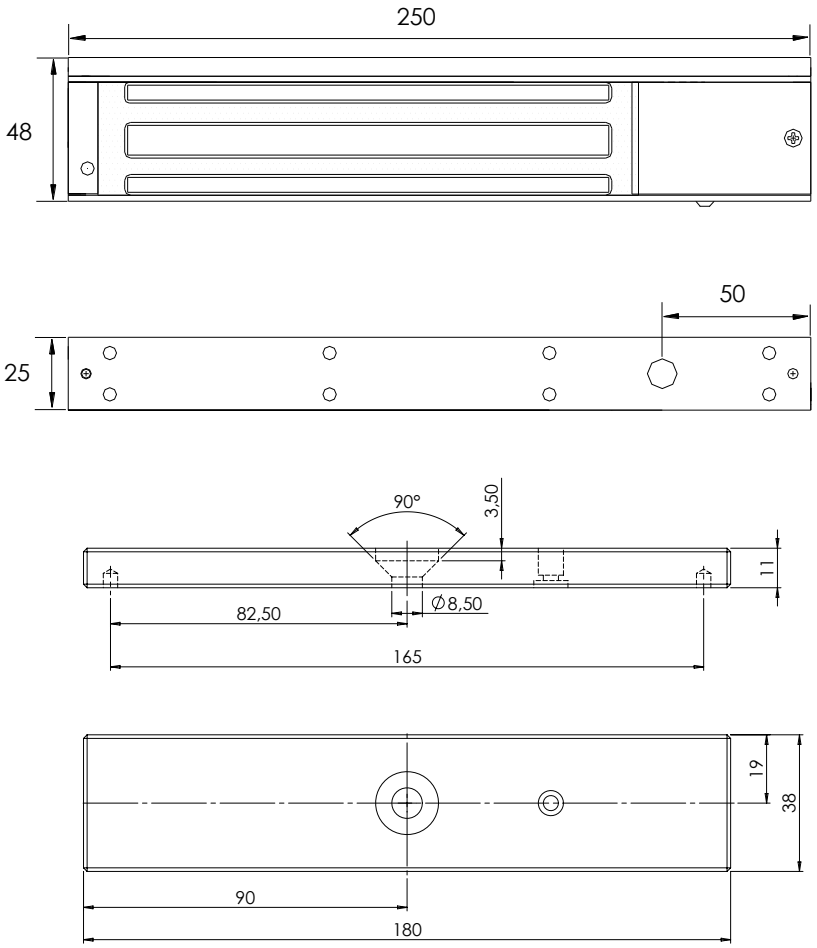

Ordering Information

LA.EMLOCK EntryPass 600lbs EM Lock

ENTRYPASS™
TOTAL CONTROL IN YOUR HAND

www.entrypass.net

Malaysia
No. 40, Jalan TPP 1/10, Taman Industri Puchong, Batu 12 Jalan Puchong, 47160 Puchong
Selangor Darul Ehsan, Malaysia.
Tel : +603 8068 1929
Fax : +603 8062 6937
Email : info@entrypass.net

Singapore
No. 1, UBI View, #03-03, Focus ONE Building, Singapore 408555.
Tel : +65- 6841 7242
Fax : +65- 6841 3937
Email : info@entrypass.net

Indonesia
Jl. Raya Lodan No. 2, kompl. Ruko Lodan Centre Blok. P 10,
Jakarta Utara 14430, Indonesia.
Tel : +62 21 6983 3153
Fax : +62 21 690 3005
Email : info@entrypass.net

A securityhub group company

securityhub